Bondura Multi Tool - Cone Puller

Type: BMT - HY - 200
For Bondura diameter Ø140 – Ø320mm

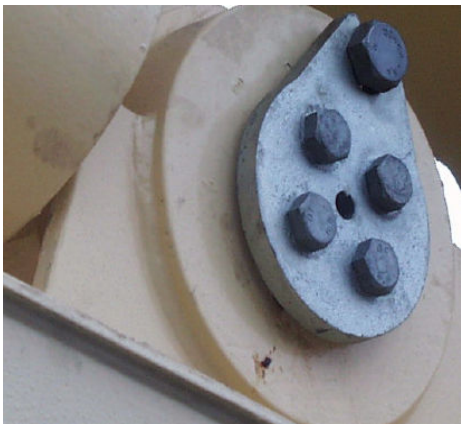

The disassembly multi tool fit up to:
Cone for Bondura 6.6
Cone for Bondura 6.1
Cone for Bondura 66.66

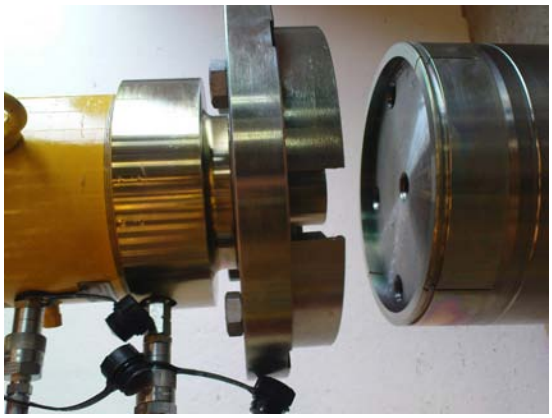

Loosen the bolt and remove the locking plate
The bolt must be completely loosened so that neither the bolt nor the taper sleeve bears on the support. The screws/ locking plate are then removed. The taper sleeves have exterior flanges for attaching to a puller.

Attach puller
The withdrawal tool with adjustable jaws is fitted around the taper flange.

Bondura Multi Tool - Bolt Puller

Type: BMT - HY - 200
For Bondura diameter Ø140 – Ø320mm

The disassembly multi tool fit up to:
Bondura 3.3
Bondura 6.6
Bondura 6.1
Bondura 66.66
Bondura 36.36
NB! The cones / taper sleeves must be disassembled before pulling out the bolt.

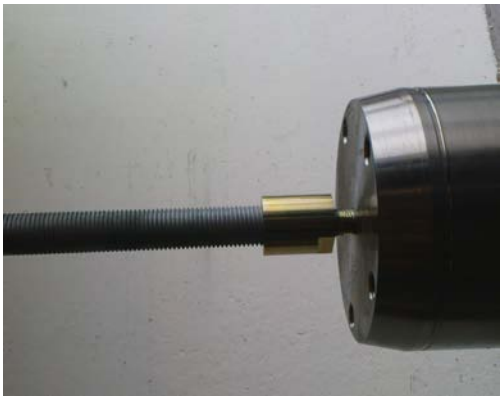

Mount the thread rod (pos.10) and the M30mm adapter (pos.13) to the Bondura. For extremely stuck bolts, it can be necessary with more pull power. Bolt Norge AS can supply adapter plates (pos.14) for directly connect the M48mm thread rod(pos.10) to the Bondura.

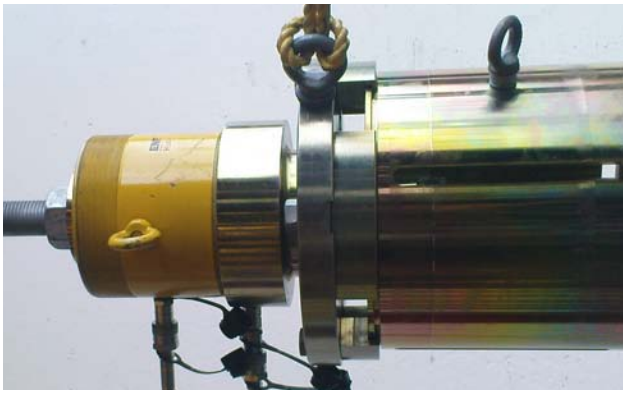

Attach hydraulic puller
with pulling plate (pos.8) and casing (pos.9) assembled onto thread rod (pos.10).
The puller is assembled.

Bondura Multi Tool - BMT- HY- 200

Cone and bolt puller for Bondura diameter Ø140 –320mm

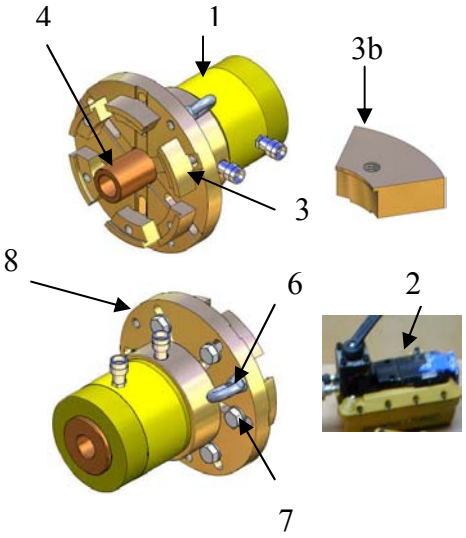

Cone puller designation

Position	Description	Item no	Content	Pieces
Pos 1:	Hydraulic puller 90ton	101488	1 pcs	☐
Pos 2a:	Pump + manometer	100826	1 pcs	☐
Pos 2b	Hydraulic hose	101472	2 pcs	☐
Pos 3:	Jaw M24 sett 200–320	101483	6 pcs	☐
Pos 3b:	Jaw M24 sett 140–200	101773	6 pcs	☐
Pos 4:	Piston extension	101487	1 pcs	☐
Pos 6:	Lifting eye M20	101485	1 pcs	☐
Pos 7:	Screws M24x65	100078	6 pcs	☐
Pos 8:	Pulling plate 200	101484	1 pcs	☐

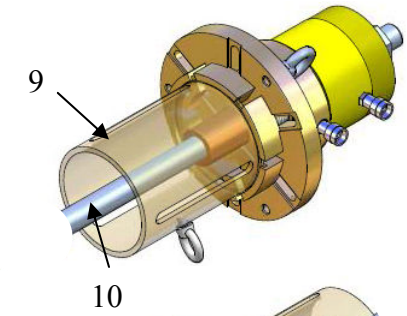

Primary bolt puller designation

Position	Description	Item no	Content	
Pos 9:	Casing – Ø200	101491	1 pcs	☐
	Casing – Ø250	103504	1 pcs	☐
	Casing – Ø320	101493	1 pcs	☐
Pos 10:	Thread rod M48	101481	1 pcs	☐
Pos 11:	Nut M48	101495	2 pcs	☐
Pos 12:	Washer	101569	1 pcs	☐

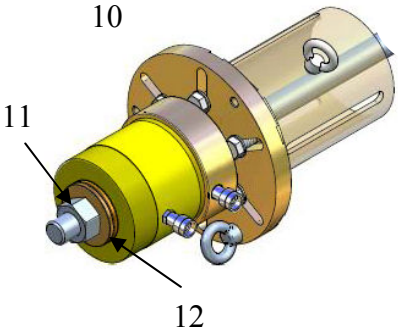

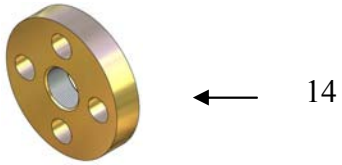

Adapters

Position	Description	Item no	
Adapter plates for Bondura 6.6			
Pos 14a:	140-150	101782	☐
Pos 14b:	160-180	101783	☐
Pos 14c:	200-220	101784	☐
Pos 14d:	225-250	101785	☐
Pos 14e:	260-320 (9 screw)	101786	☐
Pos 14f:	260-320 (5 screw)	101787	☐

…… ……
date of delivery / signature